FRICTIONAL AND WEAR ANALYSIS OF HIGH SPEED STEEL AMS 6491 (M50) MICRO COATED WITH CARBON COMPOSITE COATING

Abhishek Pathak[1], Prof. Raviprakash Patel[2], Prof. Atul Patel[3]
[1]P.G. Student, M.E (Production), [2,3]Asst. Professor, Mechanical Engineering Department,
Ahmedabad Institute of Technology

Abstract: In the said experimental work, the specimens had been prepared from M50 grade HSS coated with carbon composite coatings, especially Tungsten Carbide based coating and friction and wear analysis has been conducted through the pin on disc experiment setup. The objective was to gain reduction in coefficient of friction for the material surfaces and to reduce wear. The results were as per the expectation.
Keywords: Tribological analysis, friction, wear, carbon composite coating

I. INTRODUCTION

As far as when we talk about the mechanical properties and to make better objects, we cannot forget about tribological properties. The focus was to analyze these two properties especially for coated material, HSS AMS 6491 (M50) can be coated with carbon composites (tungsten Carbide / WC). The coating was done with Thermal Spraying coating process, with help of which has more advantageous than PVD and CVD. The hard but micro coating has been applied on the material and sent to analyze the tribological testing with help of Pin on Disc meter.

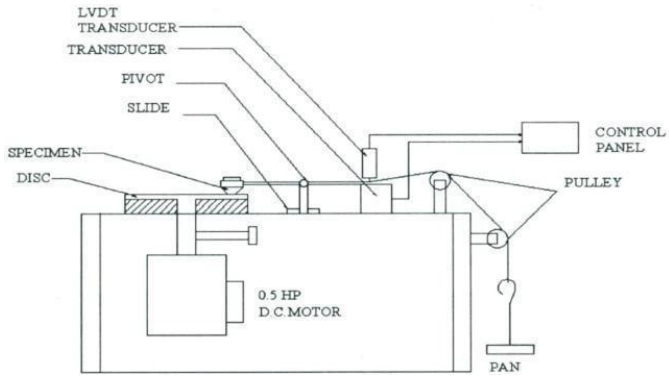

Figure 1: Schematic Diagram of Pin on Disc Meter

The experiment setup for the thermal spraying is shown in the figure below.

Figure 2: Thermal spraying process on objects

II. LITERATURE REVIEW

R.Venkatesha and others (2015-India) studies wear analysis on HSS Pin tool on stainless steel disc. The tool was coated with SiC. It was influence on SiC nano coating on HSS tool material. The performance parameters like wear rate, volume loss, stress developed, and temperature rise were compared between coated HSS pin and non coated SS disc. The coefficient of friction test was carried with Pin on Disc test. By this the coefficient of friction between two surfaces can be measured and result was like coated pin was having less volume loss rather than non coated. [1]

P. Shrinivas Rao and others (2014-India) have investigated study of tribological behaviour of alternate WC (Tungsten Carbide) coated bearing surfaces. In which they have coated the Mild Steel plate (2% C, 1.65% Mn, 0.6%Cu, 0.6% Si) with alternate WC coating has been developed with plasma spray technique and experiments are designed using full factorial design methodology. Tribological properties like wear, coefficient of friction and frictional force were found by experiments on both non coated and coated plates. Used Pin on Disk, method to analyse and getting results. Significant factors were identified and models are developed by using regression analysis and ANOVA is used for analysing results. They were able to get the conclusion that tribological properties can be enhanced by alternate coatings. Also the amount of wear was reduced by 2to3 times of the wear than uncoated disk. Also shown that load becomes significant factor to response frictional of an alternate coated disk or plate, but not for non coated disk. [2]

Wang Hong-mei and others (2014-Beijing) studied tribological properties of DLC coating films which was prepared by magnetron sputtering. The base metal was Silicon (Si) wafers with diameter of 125 mm. DLC films contains Ti, C and Ti, Cr, C which was apllied by PVD (physical vapour deposition). The microstructure was analysed by atomic force microscope (AFM) and auger electron spectrometer (AES). They have used the DLC films sliding against GCr15 ball at various loads were measured on a universal reciprocating friction and wear tester. Shown that Ti-C films have higher ratio of hardness to modulus and better wear resistance and the friction coefficient in level of 0.1-0.2 at various loads. Cr improved the hardness, modulus and roughness, but reduces the wear resistance of Ti, Cr, C DLC films. [3]

Guojia Ma and others (2014-Chaina) evaluated the friction coefficient of a TiN coated contact during sliding wear. Hard TiN coating was prepared on a bearing steel (GCr15)

substrate by applying the composite method of cathode arc and magnetron sputtering. The microstructure, micro scratch, micro hardness, and tribological behaviour of this coating were studied to get friction coefficient and other related coating properties. They have proved that coating friction and wear should me input parameters which influence each other's so need to evaluate separately. A novel friction-wear interactive friction model was developed by them to represent the evolution of friction coefficient and to predict coating breakdown. They have also used Pin on Disc meter to measure the tribological properties. [4]

R.J. Talib and others (2013-Malaysia) studied friction and wear characteristics of WC and TiCN (Titanium Carbo-Nitride) coated inserted in turning carbon steel work piece. In this, the turning performance was conducted at cutting speed of 60 mm/min, feed rate of 0.06 mm/rev and 1.0 mm depth of cut, on carbon steel work piece. The investigation of wear rate was measured by field emission scanning electron equipped with energy dispersive X-ray analyzer. Tribological characteristic was measured on Pin on Disc meter. TiCN-coated cutting tool were subjected to turning of hardened carbon steel at 50 mm/min with depth of cut at 0.5 mm and feed rate at 0.06 mm/rev under dry turning condition. The results were like TiCN coating thin film have reduced the coefficient of friction. It was also helpful to increase micro hardness and subsequently improved cutting tool life as compared to non coated turning parts. [5]

Ana Gasco Owens and others (2015-Argentina) also made comparisons of tribological properties of stainless steel with hard and soft DLC (Diamond like Carbon) coating. The films have shown their outstanding mechanical and tribological properties but have a major drawback that is their high internal stresses and low thermal stability. They have worked on different stainless steels (EN14301, EN14435 and EN12316) samples coated with DLC with help of Plasma Assisted Chemical Vapour Deposition (PACVD). In results hard and sot both a-C:H:Si (silicon containing amorphous hydrogenated carbon) films were made. Tested tribological properties with help of Pin on Disc meter, and can produce results mentioning that soft DLC films tend to develop better tribological behaviour than hard DLC films and it is not influenced by film thickness and type of steel plate substrate. Parameters were decided as slide velocity and load varies with coating type. [6]

III. EXPERIMETAL SETUP

The coating parameters and testing parameters decided in the experiment work was as per below. The coating was done by Thermal Spraying method, and the working parameters and specification as shown in table 1.

Parameters	Amount
Thermal spray gun	EWACS superjeteutalloy
Spray distance	50 mm
Metal particle size	80 – 120 micrometer
Nozzle bore size	1.7 mm
Velocity of striking metal	24 m/min

Table 1: Specification for coating process

The table 2 shows the input parameters selected for the friction and wear testing. The time selected for each run was 5 min, and sliding distance was selected as 40 mm from center point of disc.

Parameter	Level 1	Level 2	Level 3
Load N	50	100	150
RPM	500	1000	1500

Table 2: Input parameters for friction and wear testing

IV. RESULT AND ANALYSIS

Here are the key points which can describe the conclusion for the said work.

- As the increasing in Load, the coefficient of friction increases for the non-coated material.
- As the increasing in the RPM, the coefficient of friction increases for the non-coated material.
- As the increasing in the Load, the coefficient of friction increases for the coated material as well but the value in total is less compared to non-coated one.
- As the increasing in the RPM, the coefficient of friction increases for the coated material as well but the value in total is less compared to non-coated one.
- As the increasing in Load, the wear increases for the non-coated material.
- As the increasing in the RPM, the wear increases for the non-coated material.
- As the increasing in the Load, wear increases for the coated material as well but the value in total is less compared to non-coated one.
- As the increasing in the RPM, wear increases for the coated material as well but the value in total is less compared to non-coated one.

V. CONCLUSION

After the completion of the experiment, it was clear that coating the object with Tungsten Carbide can be able to reduce the coefficient of friction between surfaces compared to non coated objects. Also it is clear that coating the object with Tungsten Carbide can be able to reduce the wear of the object and prevent material loss. The validation of the result can be obtained by the self made analysis which is shown in the graph below. Negative result in wear shows the wear of disc and not of the specimens. Which itself proves that coating provides resistance to the wear rate of material.

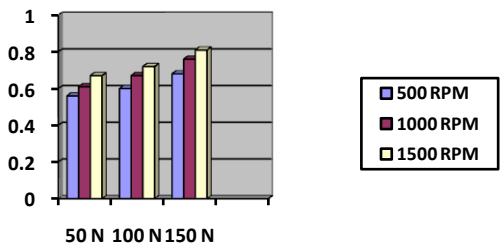

Figure 2: The COF value for given parameters for non coated material

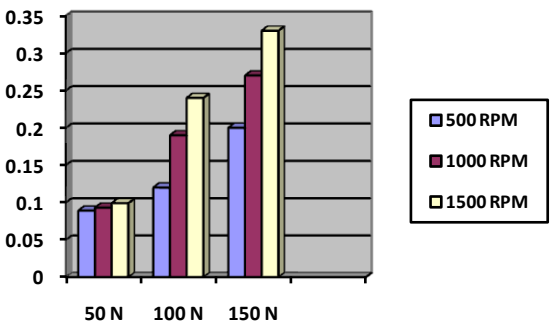

Figure 3: The COF values for coated material for given paramenters

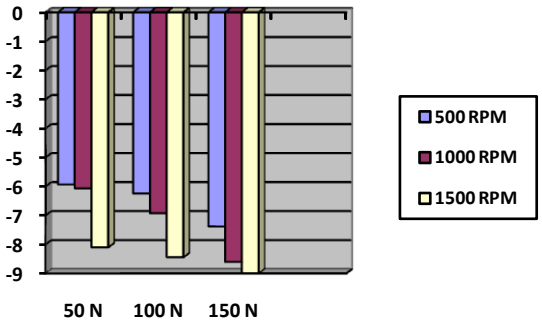

Figure 4. The Wear mesurement in microns for given parameters for non coated material

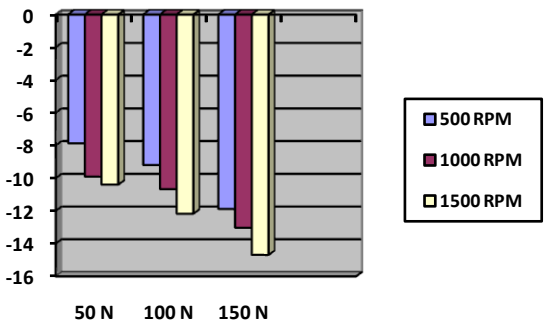

Figure 5. The Wear mesurement in microns for given parameters for coated material

VI. AKNOWLEDGEMENT

I am very thankful to my Institute guide Mr. Raviprakash C. Patel, to give me continuous support in each and every phase to submit the thesis successfully. I am also grateful to my external guide Dr. Gautam H. Upadhyay, head of Department, Mechanical Engineering, L. D. College of Engineering, Ahmedabad, to give me thorough knowledge and his excellent guidance to complete my work. Many thanks to my faculty advisor Mr. R. B. Shah, Mechanical Engineering department to give me proper knowledge of experiment process and help to understand that importance of the work. Thank you so much to Mr. Nilesh Patel, from Oerlikon Balzers India Pvt. Ltd. to enlighten me about technical things related to coating and latest technologies. I am really thankful to Mr. Saurabh from Vallabh Engineering Works to allow me to use their facility for coating and experiment work with total ease and support.

REFERENCES

[1] R. Venkatesh, Vaddi seahagiri Rao, N. Arunkumar, Sunil Biswas, R. Shobankumar, Wear Analysis on Silicon Carbide Coated HSS Pin on SS Disc Substrate, Procedia Materials Science, Volume 10, 2015, Pages 644-650, ISSN 2211-8128

[2] P. Srinivasa Rao, C.L.V.R.S.V. Prasad, G.V.S.S. Sharma, M.V.S. Babu, Experimental Investigations and Study of Tribological Behaviour of Alternate WC Coated Bearing Surfaces, Procedia Materials Science, Volume 5, 2014, Pages 1165-1173, ISSN 2211-8128

[3] Wang Hong-mei, Zhang Wei, Yu He-long, Liu Qing-liang, Tribological properties of DLC films prepared by magnetron sputtering, Physics Procedia, Volume 18, 2011, Pages 274-278, ISSN 1875-3892

[4] Guojia Ma, Liliang Wang, Haoxiang Gao, Jie Zhang, Tom Reddyhoff, The friction coefficient evolution of a TiN coated contact during sliding wear, Applied Surface Science, Volume 345, 1 August 2015, Pages 109-115, ISSN 0169-4332

[5] R.J. Talib, A.M. Zaharah, M.A. Selamat, A.A. Mahaidin, M.F. Fazira, Friction and Wear Characteristics of WC and TiCN-coated Insert in Turning Carbon Steel Workpiece, Procedia Engineering, Volume 68, 2013, Pages 716-722, ISSN 1877-7058

[6] Ana Gasco Owens, Sonia Brühl, Silvia Simison, Christian Forsich, Daniel Heim, Comparison of Tribological Properties of Stainless Steel with Hard and Soft DLC Coatings, Procedia Materials Science, Volume 9, 2015, Pages 246- 253, ISSN 2211-8128

