DATA SECURITY AND CRYPTOGRAPHY CONCEPT : A REVIEW

Sanchita Tongya[1], Rahul Sharma[2]
[1]M.Tech Research Scholar, [2]Assistant Professor,
Electronics & Communication Engineering Department (VLSI)
Rajasthan institute of engineering and technology (RIET),Jaipur,Rajasthan,India.

Abstract: Data Security has become vital perspective these days in each area .so as to ensure it different strategies and Algorithms have been actualized. Cryptography joins Mathematics, Computer Science (Software+Hardware), Engineering and Networking. In this paper we have assessed three essential cryptography calculations. What are the various sorts of assaults to hinder arrange are characterized. Fundamental devices of encryption for secure informing, exchanges and availability are brought up.

I. INTRODUCTION

Giving security and guaranteeing data has become a very problematic task. Every affiliation today ought to have approaches as for data security .In solicitation to give security certain estimations, instruments should be executed. Cryptography consistently called "code breaking" exists way over from past times. Its larger part was used during wars to send messages in disguised setup. In all honesty, the very word cryptography begins from the Greek words kryptos and graphein, which mean concealed and forming, exclusively [1].It is for the most part stress with estimation.

The basic saw utilization of cryptography is begun in non-standard emblematic portrayals engraved into milestones from the Old Kingdom of Egypt around 1900 B.C. It was structure in such a way to send message in coded gathering and would be basic for the beneficiary to scrutinize the message who knows to unravel it . The sixth Century BC, contained covering a move of paper around a load and a while later meaning the message on the paper.

The unrolled paper was then send to the recipient, who could without quite a bit of a stretch unravel the message in case he knew the width of the novel chamber [10]. 2000 years earlier Julius Caesar used an essential switch over figure, saw as the Caesar figure Roger bacon portrayed different systems in 1200s. Blaise de Vigenère circulated a book on cryptology in 1585, and explained the polyalphabetic substitution figure. In India, puzzle making was as a general rule progressively common, and the organization used secret codes to be in contact with an arrangement of spies spread directly through the country. We raise two of the noteworthy commitments from this human progression. One of them is up 'til now used today, to be explicit finger correspondences. Old India called this kind of correspondence "nirabhasa", where joints of fingers addressed vowels and various parts use for consonants. The second bit of Indian improvement of old events is that they are answerable for the essential reference in recorded history for the use of cryptanalysis for political purposes. But no frameworks are given for doing such recommendations, there is some cryptographic improvement arranged in the data that such cryptanalysis could decidedly be cultivated [9]. In essential terms Cryptography is the procedure to change over the message (Plain substance) into coded message (scramble) from Sender and transmit it to Receiver who converts(decrypt) the message into significant format(Plain content) in the wake of tolerating it to avoid the message from getting taken, hurt or lost thus as to verify it.. Cryptography has been created as huge gadget for data transmission. A collection of estimations of cryptography have been thought about

Cryptography is framework to give message mystery. The term cryptography is Greek word which means "secret creating". By and by a days, cryptography business applications. If we are guaranteeing mystery data, by then cryptography is to give noteworthy degree of assurance of individuals and social occasions. Cryptography is the systems that empower data to be sent in secure from so the fundamental authority prepared to recoup the information[4].

Displaying tenacious investigates on the new cryptographic count, are going on, regardless, it is a difficult to find the specific figuring, since we have unquestionably understood that they ought to consider various factors like: security, the features of computation, the time unusualness and space unpredictability. The guideline explanation behind the cryptography is used not only to give protection, yet also used in others security organizations like : data uprightness, affirmation , non repudiation[5]. Cryptography incorporates the strategy of encryption and unscrambling.

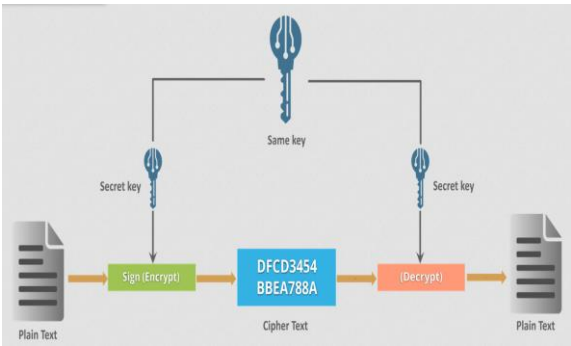

Fig 1. Cryptography

Cryptography is the investigation of composing stealthily

 Copyright 2019.All rights reserved.

code. Even more all things considered, it is connected to building and looking at shows that square enemies; 6] alternate points of view in data security, for instance, data mystery, data uprightness, affirmation, and non-revocation [6] are imperative to display day cryptography.

The testing issue is the best way to deal with adequately share blended data. Encode message with unequivocally secure key which is acknowledged just by sending and beneficiary end is a significant perspective to get strong security in sensor sort out. The secured trade of key among sender and recipient is a lot of dangerous undertaking in asset fundamental sensor coordinate. data ought to be blended first by clients before it is re-appropriated to a remote passed on accumulating advantage and the two data security and data get to security ought to be ensured to such an extent, that flowed storing master affiliations have no capacities to unscramble the data, and when the client needs to intrigue a few zones of the entire data, the scattered amassing framework will give the availability without seeing what the section of the encoded data came back to the client is about. This paper audits particular system security and cryptographic procedures. [6]

II. CRYPTOGRAPHIC ALGORITHMS

The different cryptography calculations are as per the following :

A. Data Encryption Standard (DES)

DES is a square encryption count. It was the central encryption standard conveyed by NIST. It is a symmetric computation, suggests same key is used for encryption and disentangling. It uses 64-piece key. Out of 64 bits, 56 bits make up the independent key , 8 bits are used for botch revelation. The essential exercises are bit stages and substitution in one round of DES. Six assorted stage exercises are used both in key expansion part and figure part. Unscrambling of DES computation resembles encryption, only the round keys are in reverse solicitation. The yield is a 64-piece square. Various ambushes and procedures recorded weaknesses of DES, which has made it an insecure square encryption key.

B. 3DES (Triple DES)

3DES is an update of Data Encryption Standard. It uses 64 piece square size with 192 bits of key size. The encryption strategy resembles the primary DES yet it applied on different occasions to extend the shielded time and encryption level . Triple DES is more delayed than other square encryption procedures. It has the advantage of immovable quality and an increasingly drawn out key length that sheds various backup way to go ambushes. 3DES can be used to lessen the proportion of time to break DES.

C. AES (Advanced Encryption Standard)

AES otherwise called the Rijndael's calculation , is a symmetric square figure. It was perceived that DES was not verify in view of progression in PC preparing power. It scrambles data squares of 128 bits utilizing symmetric keys. It has a variable key length of 128, 192 or 256 bits : as a matter of course 256 is utilized. AES scrambles 128 bits data obstruct into 10, 12 and 14 round as indicated by the key size. AES can be executed on different stages suxh as little gadgets encryption of AES is quick and adaptable . AES has been tried for some security applications. The reason for NIST was to characterize a swap for DES that can be utilized in non-military data security applications by US government organizations.

D. Blowfish

It is one of the most open space encryption calculations. Blowfish was structured in 1993 by Bruce Schneider as a quick option in contrast to existing encryption calculations. Blowfish is a symmetric key square figure that uses a 64 piece square size and variable key length from 32 bits to 448 bits. Blowfish has 16 rounds or less. Blowfish is an exceptionally secure figure and to utilize encryption free of licenses and copyrights. No assault is effective against Blowfish, in spite of the fact that it experiences feeble keys issue.

E. IDEA(International Data Encryption Algorithm)

Thought is a square figure computation and it chips away at 64-piece plaintext squares. The key size is 128 bits long. The arrangement of count is one of mixing exercises from different arithmetical social occasions. Three arithmetical social occasions are mixed, and they are viably executed in both hardware and programming: XOR,

Expansion modulo 216 , Multiplication modulo 216 + 1. All of these exercises deal with 16-piece sub-squares. This count is gainful on 16-piece processors. Thought is symmetric key estimation reliant on the possibility of Substitution-Permutation Structure, is a square figure that uses a 64 piece plain substance with 8 rounds and a Key Length of 128-piece permuted into 52 sub-keys all of 128-bits. It doesn't contain S-boxes and same estimation is used in exchanged for interpreting .

F. RC4

RC4 is a stream figure symmetric key computation. as the data stream is essentially XOR with created key course of action. It uses a variable length key 256 bits to present a 256-piece state table. A state table is used for period of pseudo-sporadic bits which is XOR with the plaintext to make the figure content.

G. RC5

RC5 is organized by Matt Robshaw, Ron Rivest Ray Sidney and is a symmetric key figuring that is used to amass the necessities of AES challenge . RC5 was furthermore acquainted with the CRYPTREC and NESSIE adventures. It is authorized by RSA Security . RC6 offers extraordinary execution to the extent security and comparability. RC6 is a Feistel Structured private key estimation that makes use a 128 piece plain substance with 20 rounds and a variable Key Length of 128, 192, and 256 piece. As RC6 tackles the standard of RC that can proceed with an expansive extent of

 Copyright 2019.All rights reserved.

key sizes, word-lengths and number of rounds, RC6 doesn't contain S-boxes and same estimation is used in turned around for translating.

H. Snake

Snake is an Advanced Encryption Standard (AES) competition, stood second to Rijndael, is a symmetric key square figure, arranged by Eli Biham, Ross Anderson, and Lars Knudsen. Snake is a symmetric key figuring that relies upon substitution-arrange compose Structure. It includes a 128 piece plain substance with 32 rounds and a variable Key Length of 128, 192 and 256 piece. It in like manner contains 8 S-boxes and same estimation is used in turned around for interpreting. Security presented by

Snake relied upon more standard procedures than the diverse AES finalists. The Serpent is open in the open circle and not yet authorized.

I. Twofish

Twofish is furthermore a symmetric key count subject to the Feistel Structure and was arranged by Bruce Schneier close by Doug Whiting, John Kelsey, David Wagner, Niels Ferguson and Chris Hall,. The AES is a square figure that uses a 128 piece plain substance with 16 rounds and a variable Key Length of 128, 192, 256 piece.

It uses 4 S-boxes (dependent upon Key) and same computation is used in turned around for disentangling. The makers loosens up the Blowfish gathering to improve the past square figure Blowfish to its balanced variation named Twofish to satisfied the rules of AES for computation arranging. It was one of the finalists of the AES , yet was not picked for systematization. The Twofish is an open to open circle and not yet ensured.

J. TEA

TEA is additionally a Feistel Structured symmetric key calculation. TEA is a square figure that uses a 64 piece plain content with 64 rounds and a Key Length of 128-piece with variable rounds having 32 cycles. It doesn't contain S-boxes and same calculation is utilized in switched for unscrambling. TEA is intended to expand speed and limit memory impression. Cryptographers have found three related-key assaults on TEA. Every TEA key can be found to have three equivalent keys, subsequently it tends to be utilized as a hash work. David Wheeler and Roger Needham have proposed augmentations of TEA that counter the above assaults..

III. CONCLUSION

Data security is a basic part of an association so as to protect the data from different contenders. It guarantees the protection of a client's close to home data from others. Verified and convenient transmission of data is constantly a significant angle for an association. Solid encryption calculations and streamlined key administration methods consistently help in accomplishing privacy, validation and honesty of data and decrease the overheads of the framework. Cryptography is a procedure used to maintain a strategic distance from unapproved access of data. It has two fundamental parts; an) Encryption calculation, and b) Key. At some point, various keys can likewise be utilized for encryption. In this paper we considered the current encryption calculation utilized for data security.

REFERENCES

[1] Shiji Johny Anil Antony "Secure Image Transmission Using Visual Crptography Scheme without Changing the Color of the Image" ICETECH'15© 2015 IEEE.

[2] Ali Al-Haj Gheith Abandah Noor Hussein "Crypto-based algorithms for secured medical image transmission" in IET Inf. Secur. The Institution of Engineering and Technology vol. 9 no. 6 pp. 365-373 2015.

[3] Hsinag-Cheh Huang Jiun Lin Yuh-Yih Lu "Visual Secret Sharing for Copyright Protection and Authentication of Color Images" 2015 Third International conference on Robot vision and sognal Processing© 2015 IEEE.

[4] Alavi Kunhu Fatma Taher Hussain Al-Ahmad "A New Multi Watermarking Algorithm for Medical Images using DWT and Hash Fu

[5] S. Desai, C. A. Mudholkar, R. Khade, P. Chilwant, “Image Encryption and Decryption using Blowfish Algorithm”, International Journal of Electrical and Electronics Engineers IJEEE, Volume 07, Issue 01, June 2015.

[6] Gurupeet singh and supriya “A Study of Encryption Algorithms (RSA, DES, 3DES and AES) for Information Security” International Journal of Computer Ap plications (0975 – 8887) Volume 67– No.19, April 2013

[7] Shraddha Soni, Himani Agrawal, Dr. (Mrs.) Monisha Sharma “Analysis and Comparison between AES and DES Cryptographic Algorithm” International Journal of Engineering and Innovative Technology (IJEIT) Volume 2, Issue 6, December 2012 ISSN: 2277-3754

[8] Pravin Kawle, Avinash Hiwase, Gautam Bagde, Ekant Tekam, Rahul Kalbande “Modified Advanced Encryption Standard” ISSN: 2231-2307, Volume-4, Issue-1, March 2014

[9] Monika Agrawal, Pradeep Mishra,” A Comparative Survey on Symmetric Key Encryption Techniques,” International Journal on Computer Science and Engineering (IJCSE), Vol. 4 No. 05 May 2012, PP877-882.

[10] Gurjeevan Singh, Ashwani Kumar Singla,K.S.Sandha “ Performance Evaluation of SymmetricCryptography Algorithms,” International Journal of Electronics and Communication Technology Volume 2 Issue 3, September 2011.

 Copyright 2019.All rights reserved.